FISCHLI + FUHRMANN

Increase Sustainability with the Nimcor Roll Restorer

The Nimcor Roll Restorer from Tidland, offered in a standard and heavy duty model, is designed to save you money by salvaging crushed fiber cores in rolls of paper, plastic, foil, and other types of roll stock.

Your own personnel can use the Roll Restorer to restore the unusable, damanged rolls - in your plant, at your convenience. The portable unit can be easily brought to and from any rolls that need restoration.

The Roll Restorer consists of an air operated hydraulic pump, a powerful 20 ton hydraulic ram with expander head housing to easily move through the roll, custom expander heads, bar lock assmbly, 1 inch steel bar, and a steel cart that is used to store and move the equipment.

Depending on the cost of your material, salvaging as few as 3 to 4 rolls can cover the purchase price of the Roll Restorer. Additionally, save even more time and money by minimizing storage space and waste management of unused rolls with the Nimcor Roll Restorer.

Key Features & General Specifications →

- **Portable unit for convenient storage and application**
- **Restores length of the core, not just the ends like most models**
- **20 ton hydraulic power pack easily moves adaptor through roll**
- **Easy operation, using shop air to actuate**

Roll Applications:
Crushed fiber cores from rolls of paper, plastic, foil, and more

Models:
Standard model:
50.8 - 152.4 mm Core ID (2.0 - 8.0 inch Core ID)
Maximum roll diameter: 1016 mm (40 inches)

Heavy duty model:
50.8 - 304.8 mm Core ID (2 - 12 inch Core ID)
forklift mountable

DESIGN FEATURES

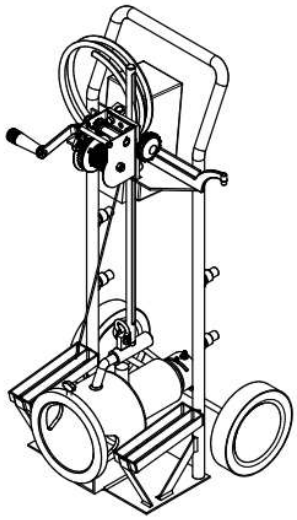

Standard Model (27L783138)

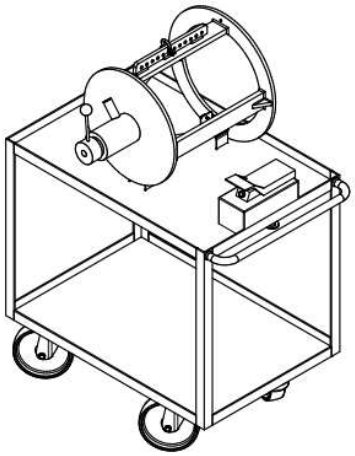

Heavy Duty Model (27L783139)

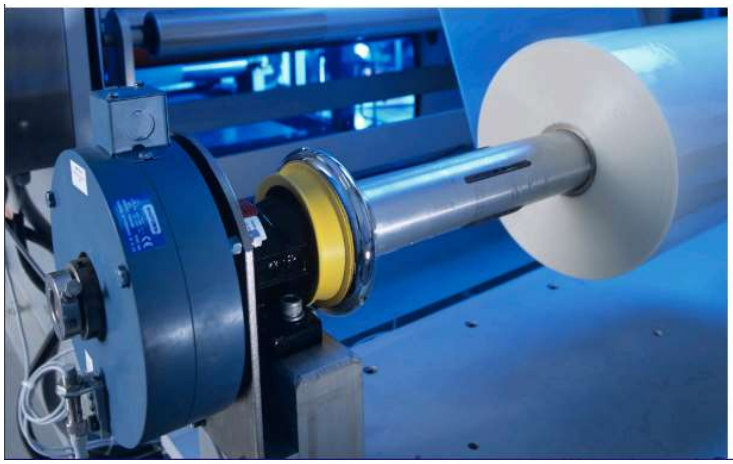

☏ 011 974 5571 ✉ info@fifu.co.za 🖱 www.fifu.co.za

11 Lathe Street, Isando, 1600, South Africa | P.O. Box 253, Isando, 1600, South Africa

Fischli & Fuhrmann (Pty) Ltd. Reg No. 1992/01592/07